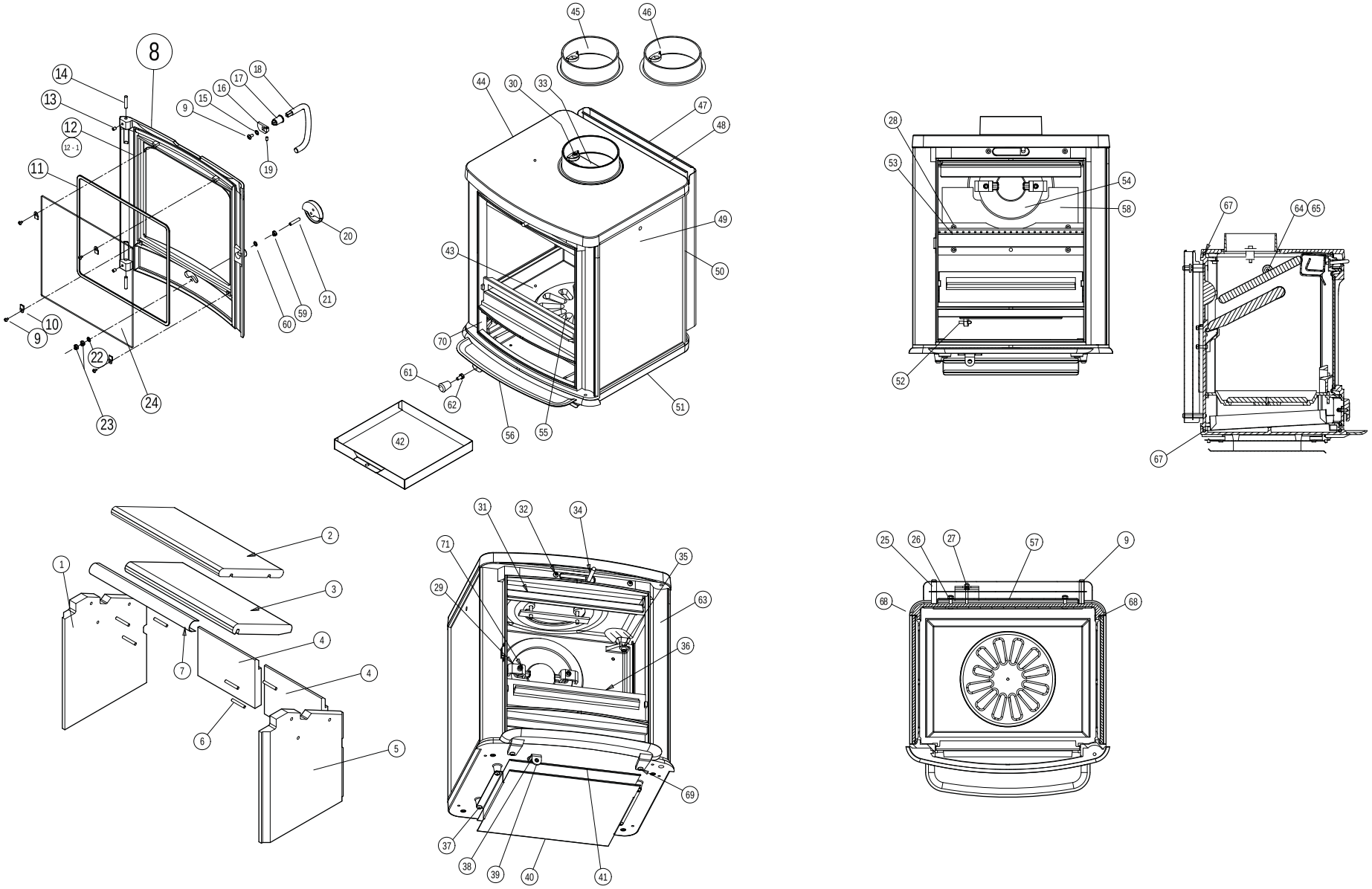

Delliste \ part list Jøtul F 145 / F 145 S		
Jøtul AS Fredrikstad Norway	Draw. no: 900211 - p00 Sheet: 1/2	Date: May. 2016

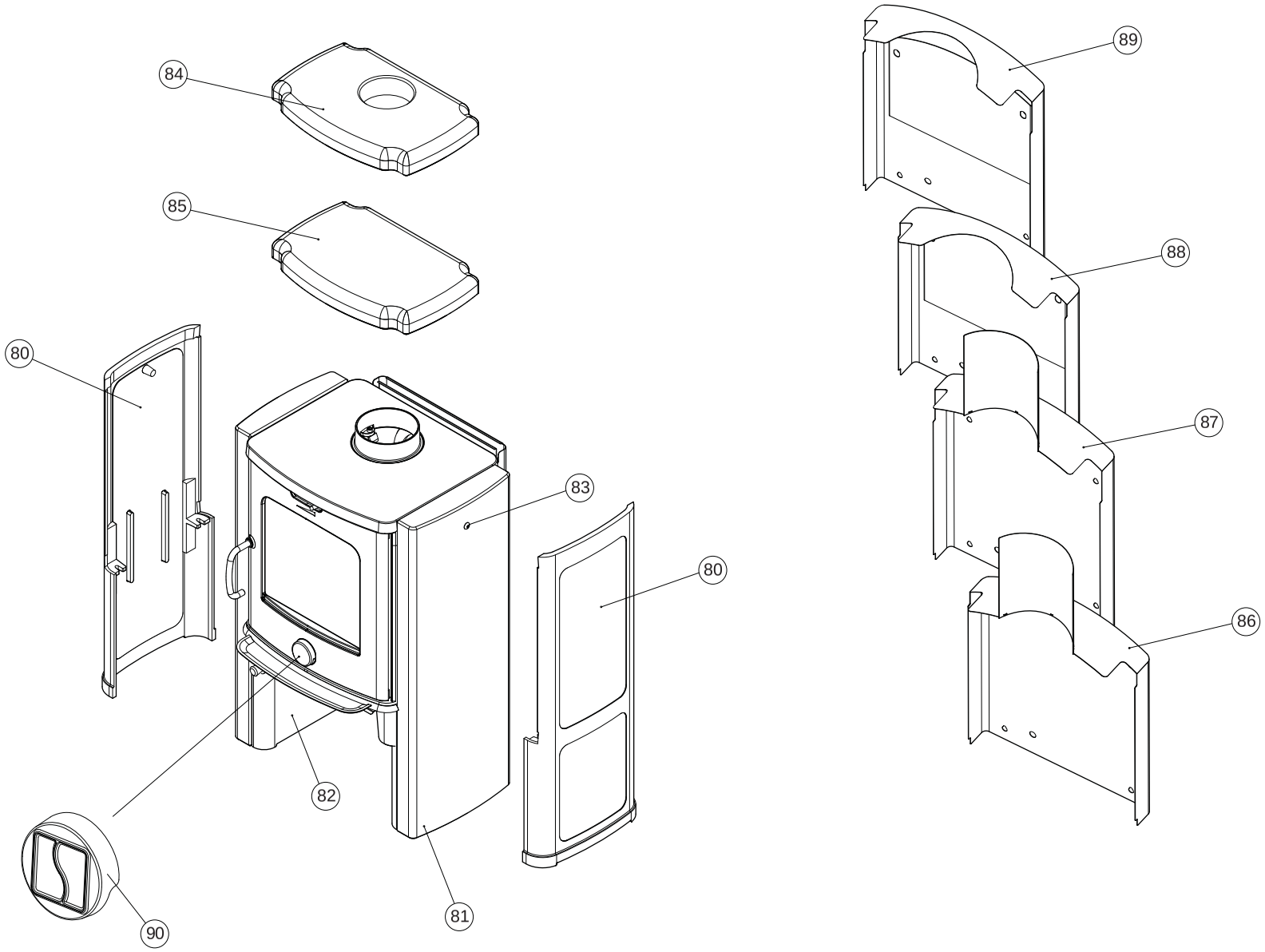

Delliste \ part list Jøtul F 145 / F 145 S		
Jøtul AS Fredrikstad Norway	Draw. no: 900211 - p00 Sheet: 2/2	Date: May. 2016